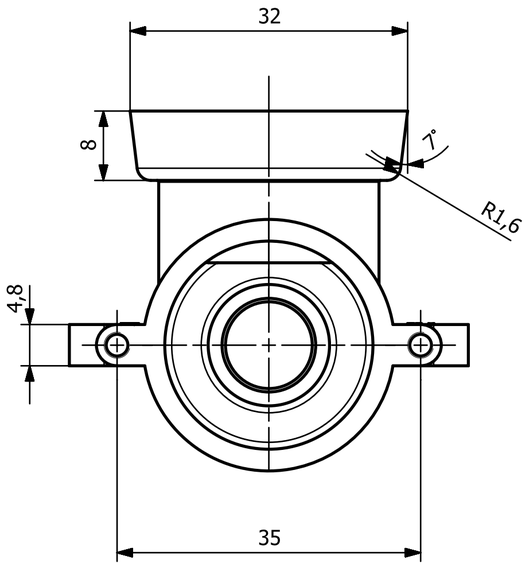

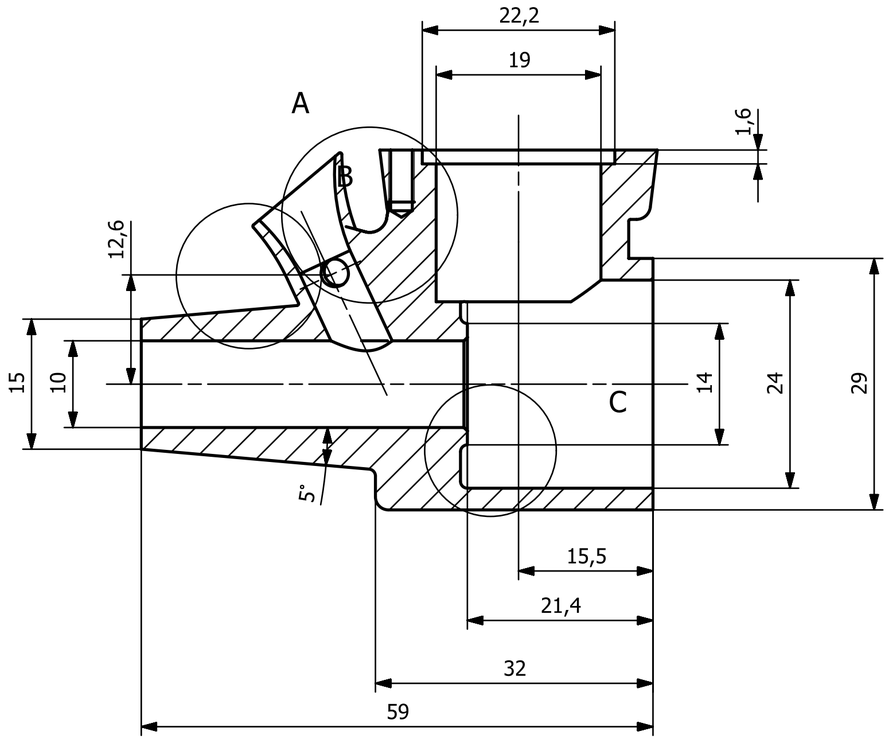

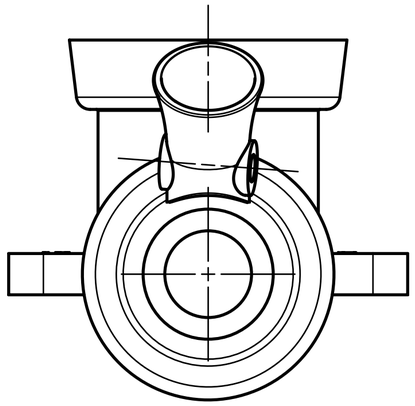

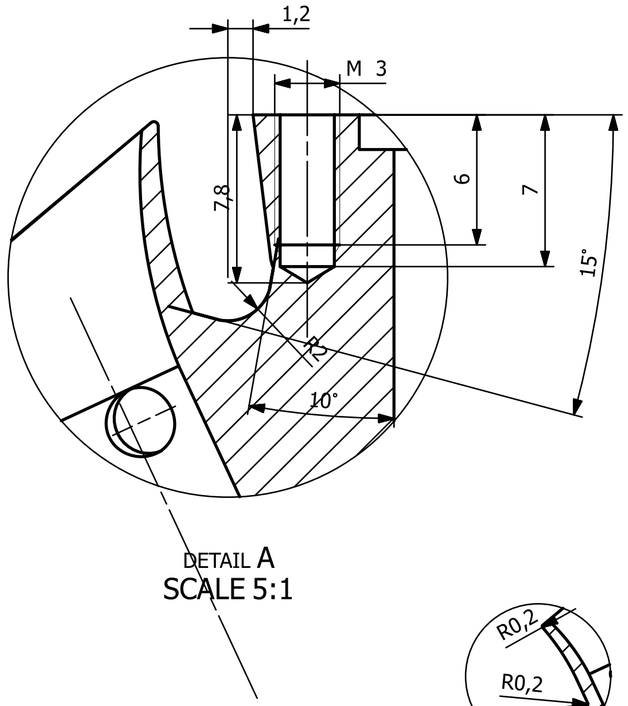

DETAIL A
SCALE 5:1

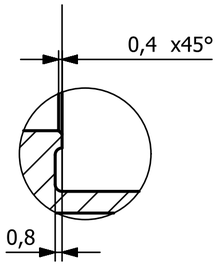

DETAIL C
SCALE 2:1

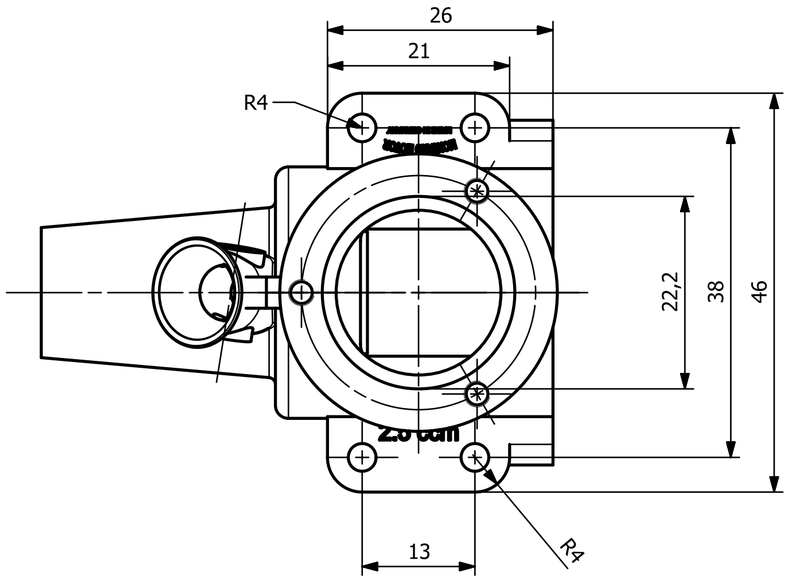

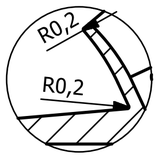

DETAIL B
SCALE 2:1

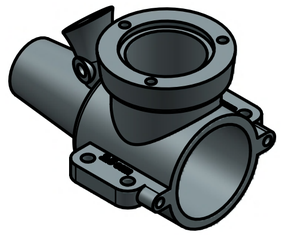

Ra3,2 Ra1,6

ALL DIMENSIONS IN mm

SIEMENS		THIS DRAWING HAS BEEN PRODUCED USING AN EXAMPLE TEMPLATE PROVIDED BY SIEMENS PLM SOFTWARE		
FIRST ISSUED	31.01.2019	TITLE		
DRAWN BY	V.Detzel			
CHECKED BY	Herr Böckle			
APPROVED BY	Alfatraining	SIZE A2	DWG NO. Gehaeuse_model_dwg	SHEET REV A
		SCALE 2:1		SHEET 1 OF 1

A2